IBRA International Bone Research Association

Program

IBRA EDUCATION PROGRAM
Master
Recommended for head of departments and senior surgeons

IBRA Master Course

Advanced Strategies for Wrist and Elbow Fractures

August 24 – 25, 2018
Las Vegas, USA

Chairman:
Dr. Scott Edwards, Phoenix, Arizona

Co-Chairmen:
Dr. Marc Richard, Durham, North Carolina
Dr. William Geissler, Jackson, Mississippi
Prof. Dr. Lars P. Müller, Cologne, Germany

Foreword

Dear colleagues,
We are excited to bring this successful international colloquium to the United States! IBRA has gathered leaders in upper extremity surgery to focus on the fracture problems that still challenge the most seasoned of surgeons.
This is an advanced course, but the dynamic for these sessions are as unique and they are enriching. Masters teaching Masters. You, the audience will be sharing your experiences as we all benefit from the education. Didactics will be interactive. The majority of time will be spent on case presentations.
The laboratory sessions will focus on treatment strategies simulating a real clinical setting. Participants will work through challenges posed by pre-fractured cadaveric specimens unlike any laboratory course you have experienced previously. Using CT and X-ray images, participants will discuss in small groups the best treatment strategy sprinkled with helpful tips and tricks provided by their instructors. Internal fixation of the fractures will be performed with an active exchange between participants and instructors. Finally, all groups will present their results and rationale for treatment so all may benefit from their efforts.

I look forward to welcoming you to Las Vegas for this memorable, interactive event.

Dr. Scott Edwards

Faculty

Chairman
Dr. Scott Edwards, Phoenix, Arizona

Co-Chairmen
Dr. Marc Richard, Durham, North Carolina
Dr. William Geissler, Jackson, Mississippi
Prof. Dr. Lars P. Müller, Cologne, Germany

Faculty Elbow
(in alphabetical order)
Dr. Cameron Atkinson, Arlington, Texas, cameron.t.atkinson@gmail.com
Dr. Ilvy Cotterell, Richmond, Virginia, ilvy.cotterell@vcuhealth.org
Dr. Scott Edwards, Phoenix, Arizona, scott.edwards@bannerhealth.com
Dr. William Geissler, Jackson, Mississippi, 3doghill@msn.com
Prof. Dr. Lars P. Müller, Cologne, Germany, lars.mueller@uk-koeln.de
Dr. Marc Richard, Durham, North Carolina, marc.richard@duke.edu
Dr. David Tuckman, Great Neck, New York, dave2@optonline.net

Faculty Wrist
(in alphabetical order)
Dr. Cameron Atkinson, Arlington, Texas, cameron.t.atkinson@gmail.com
Dr. Ilvy Cotterell, Richmond, Virginia, ilvy.cotterell@vcuhealth.org
Dr. Scott Edwards, Phoenix, Arizona, scott.edwards@bannerhealth.com
Prof. Dr. Lars P. Müller, Cologne, Germany, lars.mueller@uk-koeln.de
Dr. Michael Nicoson, Louisville, Kentucky, mnicoson@handandwristlouisville.com
Dr. Marc Richard, Durham, North Carolina, marc.richard@duke.edu
Dr. David Tuckman, Great Neck, New York, dave2@optonline.net

Friday – August 24, 2018

	Location: Platinum Training/MERIN 5831 W. Craig Road, Suite 102 Las Vegas, NV 89130	
7:00 am	**Bus transfer from the hotel to the Merin Education & Research Institute**	
7:20 – 8:00	**Breakfast and Registration**	
8:00 – 8:05	**Welcome**	***S. Edwards***
8:05 – 8:10	**IBRA Introduction**	
8:10 – 10:10	**Elbow Fractures – Theoretical Part (120 min)**	
8:10 – 8:20	Fracture simulator – a story from Cologne	*L. P. Müller*
8:20 – 8:30	Radial head: Repair or replace?	*W. Geissler*
8:30 – 8:40	Capitellar and trochlear fractures: Tips and tricks	*M. Richard*
8:40 – 8:50	Coronoid fractures: Should we treat all the same?	*D. Tuckman*
8:50 – 9:00	Monteggia fractures: Irreducible radial head - what now?	*I. Cotterell*
9:00 – 9:10	Transolecranon fracture dislocations	*C. Atkinson*
9:10 – 9:20	Terrible triad: Still terrible?	*L. P. Müller*
9:20 – 9:30	The stiff, unstable elbow	*S. Edwards*
9:30 – 10:10	Case Discussion - Putting it all together	*all*
10:10 – 10:25	**Coffee break**	

Friday – August 24, 2018

10:25 – 10:30	Medartis Implants and instruments	*Medartis*
10:30 – 1:00 pm	**Elbow Fractures Practical Part I (150 min)**	
10:30 – 12:00	Case 1: each group receives a fractured specimen and elaborates the case	*all*
12:00 – 1:00	Presentation and discussion Case 1	*Groups*
1:00 – 2:00 pm	**Lunch**	
2:00 – 4:30 pm	**Elbow Fractures Practical Part II (150 min)**	
2:00 – 3:30	Case 2: each group receives a fractured specimen and elaborates the case	*all*
3:30 – 4:30	Presentation and discussion Case 2	*Groups*
4:30 – 5:00	Summary and adjourn	*L. P. Müller*
5:00 pm	**Coach transfer to the hotel**	
7:30 pm	**Social Dinner**	

Saturday – August 25, 2018

	Location: Platinum Training/MERIN 5831 W. Craig Road, Suite 102 Las Vegas, NV 89130	
7:15 am	**Bus transfer from the hotel to the Merin Education & Research Institute**	
7:30 – 8:00	**Breakfast**	
8:00 – 8:10	**Welcome**	***S. Edwards***
8:10 – 9:40	**Radius Fractures – Theoretical Part (120 min)**	
8:10 – 8:20	Tips and tricks, plate design, locking principles	*L. P. Müller*
8:20 – 8:30	Dorsal plating in 2018: When, why, and how?	*M. Richard*
8:30 – 8:40	Troublesome lunate facet and volar rim fractures	*N. Nicoson*
8:40 – 8:50	Spanning plate concepts	*I. Cotterell*
8:50 – 10:10	Case discussion – When volar plating is not enough!	*all*
10:10 – 10:25	**Coffee break**	

Saturday – August 25, 2018

10:25 – 10:30	Medartis Implants and instruments	*Medartis*
10:30 – 1:00 pm	**Radius Fractures Practical Part I (150 min)**	
10:30 – 12:00	Case 1: each group receives a fractured specimen and elaborates the case	*all*
12:00 – 1:00	Presentation and discussion Case 1	*Groups*
1:00 – 2:00 pm	**Lunch**	
2:00 – 4:30 pm	**Radius Fractures Practical Part II (150 min)**	
2:00 – 3:30	Case 2: each group receives a fractured specimen and elaborates the case	*all*
3:30 – 4:30	Presentation and discussion Case 2	*Groups*
4:30 – 5:00	Summary and adjourn	*S. Edwards*
5:00 pm	**Coach transfer to the hotel**	

General Information

Organized by

IBRA - International Bone Research Association, Basel/Switzerland

Registration & Information

IBRA Administration Office
Hochbergerstrasse 60E, CH-4057 Basel
Phone: +41 (0)61 319 05 05, Fax: +41 (0)61 319 05 19
info@ibra.ch, Website: www.ibra.ch

Registration Fees

	Wrist & Elbow	Wrist Part	Elbow Part
IBRA Member	USD 1400	USD 760	USD 760
Non-Member	USD 1570	USD 820	USD 820

Registration Fee includes

August 24: Seminar, Workshop, Lunch and Coffee Breaks at Medical Education & Research Institute of Nevada

August 25: Seminar, Workshop, Lunch and Coffee Breaks at Medical Education & Research Institute of Nevada

Registration for Workshop only: not possible!

Group Dinner Event: included

Registration Deadline: July 20, 2018

General Information

Educational hours

Theoretical Part on Friday, August 24 - 390 min

Practical Part on Saturday, August 25 - 390 min

Total: 13h

Target audience

Recommended for senior surgeons and physicians in private practice.

Main specialty of the event

An interactive seminar and hands-on workshop, addressing trauma and reconstruction with representative cases and discussions. International faculty present latest innovations and trends both in lectures and surgical demonstrations to the participating senior surgeons.

Expected total number of participants

28

Educational needs

A vital scientific exchange between experts of the subspecialty reaching out for the establishment of refined standards in surgery and further improved treatment for patients has been identified as the specific need of this course level. Opening of new perpsectives and a solid sounding board. Testing and possible confirmation of individual ideas through discussion with peer experts.

Expected educational outcomes

Broadening of spectrum of good practices and their dissemination along with awareness of new/improved techniques and methodologies to diagnose, treat and follow-up patients.

General Information

Clear description of the nature of the event

Day one focuses on lectures with cases presentations and discussions. Panel discussions analyze cases, followed by „pearls and pitfalls“. Day two provides a hands-on cadaver lab that allows the mutual exchange of personal experience by directed instructions. The interactive course format will engage the participants and highlight the controversy linking lack of evidence and broad range of experience.

Methods to promote active learning

Multimedia presentations; time for question & answer sessions and discussion; cadaver workshop (of pre-fractured specimens) with sharing and discussion of the various cases.

International audience

Yes

Main language of the event

The official event language is English.

Sunshine Act Reporting

In compliance with federal and state laws, including the Physician Payment Sunshine Act, all attendee meeting expenses will be reported to the U.S. government as in-kind payment such as course fees (shuttle, actual cost of meals). AdvaMed guidelines also prohibit spouses or guests from participating in dinners and/or meal functions.

General Information

Social Dinner

Friday, August 24, 2018

Time

7:30 pm

Location

The Westin Las Vegas Hotel
160 E Flamingo Road
Las Vegas, NV 89109
westin.com/lasvegas

Course Location

Platinum Training/MERIN
5831 W. Craig Road
Suite 102
Las Vegas, NV 89130
http://platinumtraining.org/las-vegas/

General Information

Accommodation

The Westin Las Vegas Hotel
160 E Flamingo Road
Las Vegas, NV 89109
Phone: +1 702 836 5900
westin.com/lasvegas

Housing Information

Attendees are responsible for own reservations and bookings may be made by calling the hotel directly at +1 866 837 4215 (use group name IBRA) or by using the online booking link:

https://secure-web.cisco.com/12oYhHiXHiIWvJucwE7UU8j1DvVHyGxlEnBz-EiZwtif7QPvrjrIlFuFEcQwi6rxqXVdddLk27iUCBw63VC7KXq2GAZhEhaqTVVzZyVzSbxfhp-ZQNnaRYKVPPF4B7EPlCPAT36Yx6T9VERht1zCtG0WBZvBBQoz-nax4UBym8TYkd5rA4GWVTI5GKNZnI49V0UTGaY_djvPkRyAP4dE4ezN1_6DxfGMbO4OxflWRvYBvxZxydyNmui0Xsi8pWpmp4Z/https%3A%2F%2Fwww.starwoodmeeting.com%2Fevents%2Fstart.action%3Fid%3D1805223902%26key%3D1A6B876D

Room rate of USD 99 per person, per night (plus daily destination fee of USD 32 and 13.38% tax) subject to availability.

All reservations must be accompanied by a first night room deposit or guaranteed with a major credit card. The Westin Las Vegas Hotel will not hold any bookings unless secured with credit card. Guests must cancel room reservations 72 hours prior to confirmed arrival date to avoid a non-refundable cancellation fee equal to one night's room and tax.

General Information

Method of Payment

The following methods of payment are accepted:

Credit Card VISA Master Card American Express

Bank Transfer (USD)	Bank J. Safra Sarasin AG, CH-4002 Basel
Account no.	6010055.4002
IBAN no.	CH87 0875 0060 1005 5400 2
Clearing no.	8750
SWIFT	SARACHBB

Refund Policy

All refunds must be requested in writing to the IBRA Administration Office. If written notification is received 3 weeks prior to the event, a full refund less a USD 40 processing fee will be given. If written notification is received 10 days prior to the event, a refund of 50% of the registration fee will be given. For later notifications there will be no refunds. Refunds will not be given for non-attendance.

Sponsoring

We thank our major industry partners Medartis and Hologic for contributing in-kind support (material and logistics) without which this event would not be possible.

medartis®

HOLOGIC The Science of Sure

General Information

Disclaimer and Waiver

I understand that the material presented in this educational program (the "Program") has been made available under sponsorship of IBRA (International Bone Research Association) for educational purposes only. This material is not intended to represent the only, nor necessarily the best, method or procedure appropriate for the medical situations discussed, but rather is intended to present an approach, view, statement or opinion of the faculty that may be of interest to others.

As a condition of my participation in the Program, I hereby (i) waive any claim I may have against IBRA and its officers, directors, employees, sponsor, agents, or against the presenters or speakers, for reliance on any information presented in the Program; and (ii) release IBRA, its officers, directors, employees, sponsors and agents, as well as the presenters and speakers, from and against any and all liability for damage or injury that may arise from my participation or attendance at the Program.

I further understand and agree that no reproduction of any kind, including photographs, audiotapes and videotapes, may be made of the Program.
All property rights in the material presented, including common law copyright, are expressly reserved to the presenter or speaker or to the IBRA.

IBRA is not responsible for expenses incurred by an individual who is not confirmed and for whom space is not available. Costs incurred by the registrant, such as airline or hotel fees or penalties, are the responsibility of the registrant.

I hereby certify that I am correctly vaccinated against the current diseases which could be transmitted during the dissection workshops. I also certify that my personal insurance company will take in charge the possible injuries and complications that may occur during the dissection workshops. I relieve the organizers from their responsibility concerning any injury and complication that may occur during the workshops.

By registering for the Program, I consent to the conditions of participation set forth above.

IBRA International Bone Research Association

IBRA is a financially independent, internationally oriented non-profit organization, for specialized clinicians and research scientists. IBRA's core activity is the future-oriented advancement of bone-tissue research and management focusing particularly on:

- Bone biology, including osteointegration, bone generation and soft tissue reaction
- Maxillofacial and orthopaedic rehabilitation
- Materials research including hardware development
- Biomechanics
- Tissue engineering
- Surgical procedures & clinical management

IBRA encourages the development of innovative solutions in a friendly, loyal atmosphere. Future-oriented open-mindedness and international acceptance form the basis for first-rate assistance in realizing modern research projects and promoting individual careers. As an international forum reaching across geographic and cultural borders, IBRA offers an up-todate network for the exchange of experience and knowledge in applied bone and tissue research.

History

IBRA was founded in Zurich, Switzerland on September 25, 2004 at the initiative of eighteen forward-looking clinicians. Its primary aims are the exchange of professional knowledge, promotion of new scientific developments, engineering of the musculoskeletal system, coordinated multi-centre research and highly specialized advanced training.

Research Support

IBRA offers financial support for research projects dealing with bone biology and the improvement or development of internal fixation devices for maxillofacial and limbs surgery. With the emphasis on innovation and suitability for practical application, 95% of the research budget goes towards applied research and clinical studies and 5% towards basic research.

Education

IBRA's education area offers clinicians special courses on the application of specific methods of treatment. IBRA's particular concern is to train tomorrow's highly qualified research scientists. IBRA enhances its members' qualifications through a scholarship program.

Notes

medartis®

PRECISION IN FIXATION

APTUS®

Hand | Wrist | Elbow

www.medartis.com

Notes

medartis®

PRECISION IN FIXATION

APTUS®
Ulna Shortening System 2.5

Rotation-proof with guided compression

Precise and finely adjustable saw guide (2 – 8 mm)

Controlled compression by using the spindle

Osteotomy performed with the plate in position due to a recess on the plate

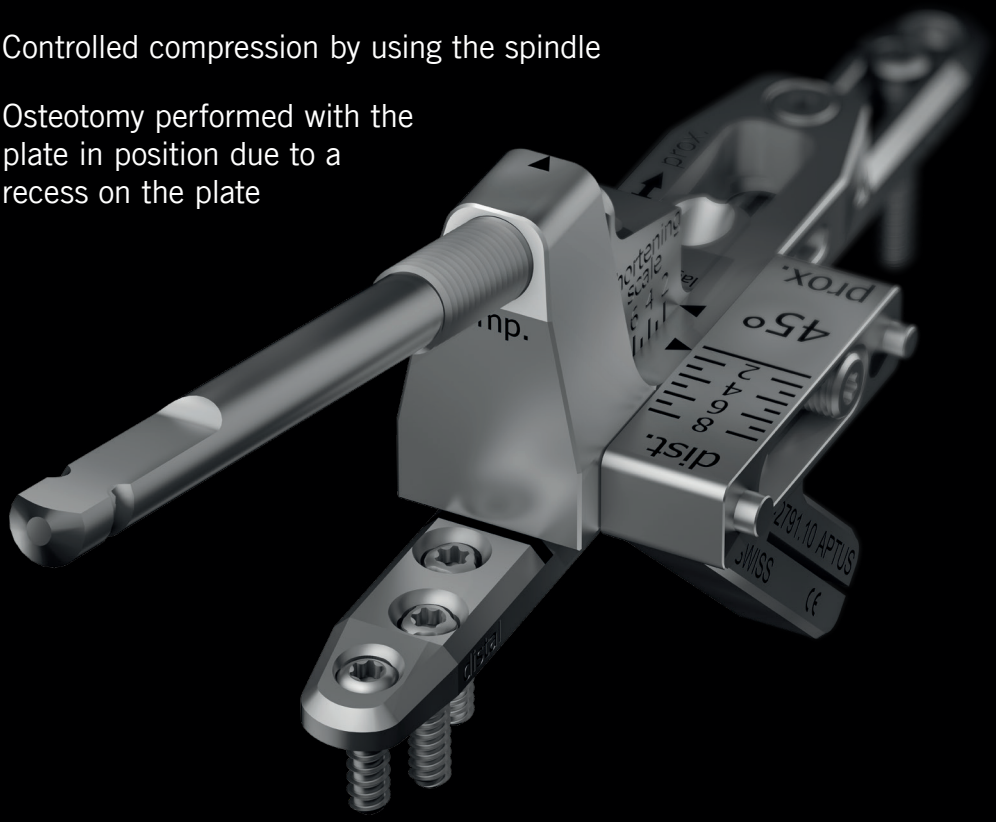

www.medartis.com

IBRA
International Bone Research Association

Hochbergerstrasse 60E
CH-4057 Basel
Phone +41 61 319 05 05
Fax +41 61 319 05 19
info@ibra.ch
www.ibra.ch