IBRA International Bone Research Association

Program

IBRA EDUCATION PROGRAM Basic

IBRA Seminar and Workshop

Osteosynthesis of the Hand & Wrist

January 31 – February 1, 2019
Irchel Campus
University of Zurich
Institute of Anatomy

University of Zurich[UZH]

Chairman:
PD Dr. med. Maurizio Calcagni

Foreword

Dear friends,

the treatment of hand and wrist fractures greatly evolved in the last few years enlarging the spectrum, but also posing new challenges. The introduction of new fixation material together with better understanding of the wrist biomechanics allowed for new approaches and eventually enhanced results. The accurate diagnosis of the injury, the choice of the best possible treatment strategy (surgical or not), the use of the most adapted osteosynthesis and a personalized rehabilitation protocol are all necessary steps for an optimal functional recovery.

This course features theoretical demonstrations followed by practical workshops on anatomical specimens. This structure will give an in deep sight of the actual state of the art in the treatment of most common hand and wrist injuries. Four key-lectures will highlight specific topics in the hand and wrist fixation.

The small number of participants together with the large faculty local and international experts will allow for a constructive and in depth discussion. The experts will guide the participants through the different exercises and will stay at disposal for analysis of specific cases or problems.

We look forward to welcoming you in Zurich for a highly productive course.

PD Dr. Maurizio Calcagni
Zurich, CH

General Information

Chairman

PD Dr. Maurizio Calcagni, Zurich, CH

Faculty

(in alphabetical order)

Vera Beckmann-Fries, Zurich, CH
PD Dr. Maurizio Calcagni, Zurich, CH
Dr. Christoph Erling, Zurich, CH
Dr. Daniel Herren, Zurich, CH
Prim. Dr. Wolfgang Hintringer, Vienna, AT
Dr. Radek Kebrle, Czech Republic
Dr. Thomas Mészáros, Zurich, CH
Dr. Ivan Tami, Lugano, CH
Dr. Frederik Verstreken, Antwerpen BE
Matthias Walter, Basel, CH

Thursday – January 31, 2019

8:00 – 8:30	**Registration**	
8:30 – 8:40	**Welcome**	
8:40 – 12:35	**Session I**	
8:40 – 8:55	Material science from the implant industry point of view	*M. Walter*
8:55 – 9:25	Treatment of proximal phalanx fractures	*W. Hintringer*
9:25 – 9:45	Lecture: Endomedullary fixation of finger bones	*M. Calcagni*
9:45 – 10:05	**Coffee Break**	
10:05 – 11:05	Lab 1: Horizontal fracture of the proximal phalanx	*Ch. Erling*
11:05 – 12:35	Lab 2: Horizontal fracture of the proximal phalanx	*T. Mészáros*
12:35 – 13:35	**Lunch**	

Thursday – January 31, 2019

13:35 – 17:20	**Session II**	
13:35 – 13:55	Lecture: Strategies in the treatment of metacarpal fractures (first to fifth)	*W. Hintringer*
13:55 – 14:15	Lecture: Complications in the treatment of finger fractures	*D. Herren*
14:15 – 15:05	Lab 3: Neck fracture of the 2. metacarpal	*R. Kebrle*
15:05 – 15:55	Lab 4: Winterstein fracture 1. metacarpal	*F. Verstreken*
15:55 – 16:15	**Coffee Break**	
16:15 – 16:35	Lecture: Rehabilitation of finger fractures	*V. Beckmann-Fries*
16:35 – 16:55	Lecture: Fractures involving PIP joints	*R. Kebrle*
16:55 – 17:15	Lecture: PIP arthroplasty strategies and evidences	*D. Herren*
17:15 – 17:20	Closing of the day	
19:30 – 23:00	**Social Dinner**	

Friday – February 1, 2019

8:00 – 11:50	**Session III**	
8:00 – 9:00	Lab 5: Fractures of the scaphoid palmar approach	*F. Verstreken*
9:00 – 10:00	Lab 6: Fractures of the scaphoid dorsal approach	*I. Tami*
10:00 – 10:20	**Coffee Break**	
10:20 – 10:50	Lecture: Partial wrist fusions	*F. Verstreken*
10:50 – 11:50	Lab 7: Four corner fusion	*D. Herren*
11:50 – 12:50	**Lunch**	

Friday – February 1, 2019

12:50 – 17:10	**Session IV**	
12:50 – 13:50	Lab 8: Fractures of the distal radius palmar approach	*I. Tami*
13:50 – 14:50	Lab 9: Ulna Shortening	*W. Hintringer*
14:50 – 15:50	Lab 10: Fractures of the distal radius dorsal approach	*R. Kebrle*
15:50 – 16:10	**Coffee Break**	
16:10 – 16:40	Lecture: Arthroscopy distal radius fixation	*I. Tami*
16:40 – 17:10	Lecture: 3D technology for hand and wrist fractures and their complications	*F. Verstreken*
17:10 – 17:15	**Closing of the course**	

General Information

Chairman

PD Dr. Maurizio Calcagni, Zurich, CH

Organized by

IBRA - International Bone Research Association, Basel, Switzerland

Registration & Information

IBRA Administration Office
Hochbergerstrasse 60E
CH-4057 Basel
Phone +41 61 319 05 05
Fax +41 61 319 05 19
info@ibra.ch
www.ibra.ch

Registration under www.handflaps.org also possible

Course Fee

IBRA Member	EUR 440
Non Member	EUR 880

Course Fee includes

January 31+ February 1: Lunch and Coffee Breaks

Registration for Workshop only: not possible!

Group Dinner Event: not included

Group Dinner Event

Costs: EUR 40 per person

General Information

Educational hours

Theoretical Part on, Thursday January 31 - 165 min
Practical Part on Thursday, January 31 - 250 min

Theoretical Part on Friday, February 1 - 90 min
Practical Part on Friday, February 1 - 360 min

Total: 14,5h

Target audience

Recommended for residents and physicians in sub-specialty training.

Main specialty of the event

The course offers the basics in clinical diagnostics, treatment and follow-up. The focus is on state-of-the-art surgical techniques.

Expected number of Participants

20

Educational needs

Based on expressed needs by participants of previous courses and events (evaluations), residents and physicians in training request and appreciate „hands-on“ workshops, explanations of experts, the exchange with a variety of faculty as discussions with peers about clinical cases.

Expected educational outcomes

Consolidate the knowledge of classifications and most useful approaches, increase the spectrum of skills dealing with standard surgeries. Learning tips and tricks in applying techniques and conducting operations

General Information

Clear description of the nature of the event

Standard procedures and interesting cases are introduced in lectures and con-train case studies and discussions. After that, a cad lab worskhop follows the theoretical sessions. Each approach is usually explained by a corresponding educational video explained by a faculty member.

Methods to promote active learnin

Multimedia presentations; time for question & answer sessions and discussion; cadaver workshop with tips & tricks shown by faculty members.

International audience

Yes

Main language of the event

The official congress languages is English.

Simultaneous translation

No simultaneous translation will be provided.

General Information

Method of Payment

The following methods of payment are accepted:

Credit Card VISA Master Card

Bank Transfer (EUR)	Bank J. Safra Sarasin AG, CH-4002 Basel
Account no.	6010055.4001
IBAN no.	CH17 0875 0060 1005 5400 1
Clearing no.	8750
SWIFT	SARACHBB

Registration and Confirmation

All registrations are confirmed by e-mail. If you have not received a confirmation prior to your departure for this course, please contact us.

Refund Policy

All refunds must be requested in writing to the IBRA Administration Office. If written notification is received 3 weeks prior to the event, a full refund less a EUR 40 processing fee will be given. If written notification is received 10 days prior to the event, a refund of 50% of the registration fee will be given. For later notifications there will be no refunds. Refunds will not be given for non-attendance.

Sponsoring

We thank our major industry partners Medartis and Hologic for contributing in-kind support (material and logistics) without which this event would not be possible.

medartis®

HOLOGIC The Science of Sure

General Information

Disclaimer and Waiver

I understand that the material presented in this educational program (the "Program") has been made available under sponsorship of IBRA (International Bone Research Association) for educational purposes only. This material is not intended to represent the only, nor necessarily the best, method or procedure appropriate for the medical situations discussed, but rather is intended to present an approach, view, statement or opinion of the faculty that may be of interest to others.

As a condition of my participation in the Program, I hereby (i) waive any claim I may have against IBRA and its officers, directors, employees, sponsor, agents, or against the presenters or speakers, for reliance on any information presented in the Program; and (ii) release IBRA, its officers, directors, employees, sponsors and agents, as well as the presenters and speakers, from and against any and all liability for damage or injury that may arise from my participation or attendance at the Program.

I further understand and agree that no reproduction of any kind, including photographs, audiotapes and videotapes, may be made of the Program. All property rights in the material presented, including common law copyright, are expressly reserved to the presenter or speaker or to the IBRA.

IBRA is not responsible for expenses incurred by an individual who is not confirmed and for whom space is not available. Costs incurred by the registrant, such as airline or hotel fees or penalties, are the responsibility of the registrant.

I hereby certify that I am correctly vaccinated against the current diseases which could be transmitted during the dissection workshops. I also certify that my personal insurance company will take in charge the possible injuries and complications that may occur during the dissection workshops. I relieve the organizers from their responsibility concerning any injury and complication that may occur during the workshops.

By registering for the Program, I consent to the conditions of participation set forth above.

General Information

IBRA is a financially independent, internationally oriented non-profit organization for specialized clinicians and research scientists. IBRA's core activity is the future-oriented advancement of bone-tissue research and management focusing particularly on:

- Bone biology, including osteointegration, bone generation and soft tissue reaction
- Maxillofacial and orthopaedic rehabilitation
- Materials research including hardware development
- Biomechanics
- Tissue engineering
- Surgical procedures & clinical management

IBRA encourages the development of innovative solutions in a friendly, loyal atmosphere. Future-oriented open-mindedness and international acceptance form the basis for first-rate assistance in realizing modern research projects and promoting individual careers. As an international forum reaching across geographic and cultural borders, IBRA offers an up-to-date network for the exchange of experience and knowledge in applied bone and tissue research.

History
IBRA was founded in Zurich, Switzerland, on September 25, 2004 at the initiative of eighteen forward-looking clinicians. Its primary aims are the exchange of professional knowledge, promotion of new scientific developments, engineering of the musculoskeletal system, coordinated multi-centre research and highly specialized advanced training.

Research Support
IBRA offers financial support for research projects dealing with bone biology and the improvement or development of internal fixation devices for maxillofacial and limbs surgery. With the emphasis on innovation and suitability for practical application, 95% of the research budget goes towards applied research and clinical studies and 5% towards basic research.

Education
IBRA's education area offers clinicians special courses on the application of specific methods of treatment. IBRA's particular concern is to train tomorrow's highly qualified research scientists. IBRA enhances its members' qualifications through a scholarship program.

General Information

Venue

Irchel Campus
University of Zurich
Institute of Anatomy
Winterthurerstr. 190
CH-8057 Zürich

University of Zurich[UZH]

Accomodation

Hotel Leonardo am Rigihof
Universitätstrasse 101
8006 Zurich
Phone: +41 (0)44 - 360 120 0
E-mail: info.zurich@leonardo-hotels.com

Social Dinner

Thursday, January 31, 2019
Time: 19:20 - 23:00

Alpenrose
Fabrikstrasse12
8005 Zürich
Phone: 044 431 11 66
Web: www.restaurantalpenrose.ch

Costs per person: EUR 40

Notes

Notes

Notes

UniversitätsSpital Zürich

Preliminary Programme

14th ZURICH WORKSHOP ON HAND FLAPS

January 28 - 29, 2019

8th ZURICH WORKSHOP ON TENDON REPAIR

January 30, 2019

4th OSTEOSYNTHESIS OF THE HAND & WRIST IBRA WORKSHOP

January 31 – February 1st, 2019

WWW.HANDFLAPS.ORG

Under the patronage of FESSH

medartis®

PRECISION IN FIXATION

APTUS®
Ulna Shortening System 2.5

Rotation-proof with guided compression

Precise and finely adjustable saw guide (2 – 8 mm)

Controlled compression by using the spindle

Osteotomy performed with the plate in position due to a recess on the plate

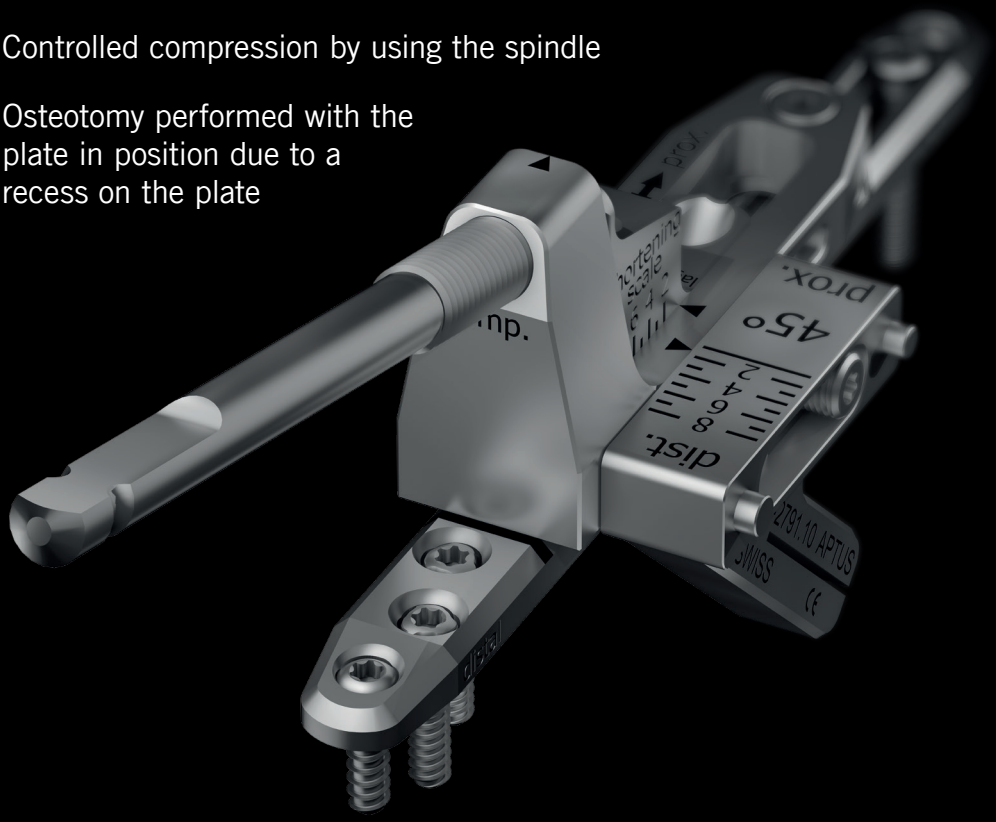

www.medartis.com

IBRA
International Bone Research Association

Hochbergerstrasse 60E
CH-4057 Basel
Phone +41 61 319 05 05
Fax +41 61 319 05 19
info@ibra.ch
www.ibra.ch